REVISIONS					
REV	DESCRIPTION	DATE	DR	CHK	APPR
X2	Release	3/26			

PRODUCT SPECIFICATIONS
MODEL NUMBERS TM848-1 AND TM848-2
EIGHT-INCH FLEXIBLE DISK DRIVES, 48 TPI

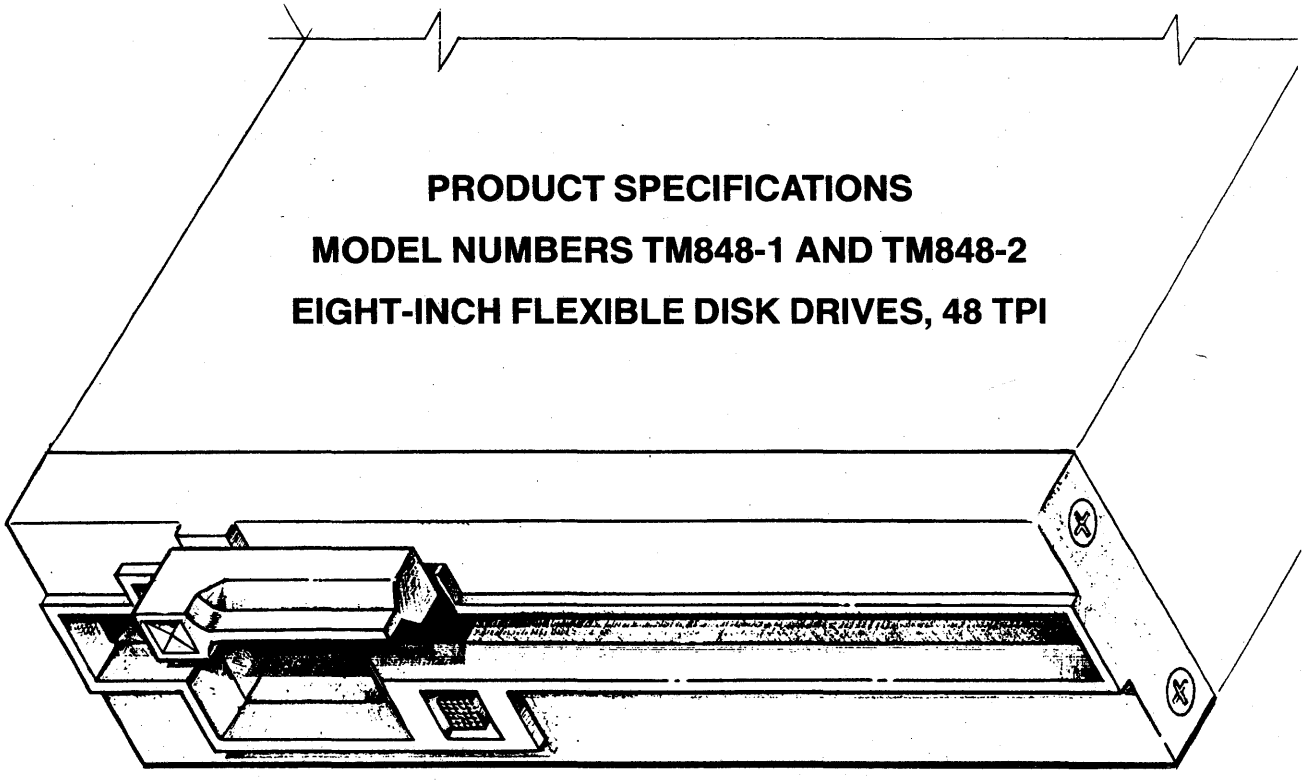

SIGNATURES	DATE
DR. O'BRIEN	3/24
CHK	
DES	
ENGR	
PROJ. ENGR MUNRO	3/25

MATL.

Tandon
CORPORATION

TITLE
PRODUCT SPECIFICATIONS
MODEL NUMBERS TM848- AND -2
EIGHT-INCH FLEXIBLE
DISK DRIVES, 48 TPI

SIZE	CODE IDENT NO.	DWG NO.	REV
A		210069	X2
SCALE		DO NOT SCALE DWG	SHEET 1 OF 14

1. INTRODUCTION

Tandon Corporation's Model TM848-1 and Model TM848-2 eight-inch flexible disk drives are full-feature drives that may be installed in only one-half the space normally required for an eight-inch disk drive. They are compact data storage devices that use an IBM - formatted Industry Standard eight-inch diskette.

The Model TM848-1 flexible disk drive is capable of reading and writing in single density format on a diskette, using a proprietary read/write head developed and patented by the Tandon Corporation. This disk drive has a double density capability when a Modified Frequency Modulated (MFM) or other appropriate recording technique is used. The encoding and decoding of the data is done by the user's Controller. The Model TM848-2 flexible disk drive doubles data storage capabilities by utilizing both sides of the diskette.

Track positioning is accomplished by utilizing a metal band driven by a high-speed stepper motor that provides a three (3) millisecond track-to-track step interval.

The use of a DC spindle motor, which may be optionally controlled by the host system, reduces power consumption and heat dissipation within the disk drive.

1.1 SCOPE OF THE DOCUMENT

This product specification contains the major features, performance specifications, reliability, environmental specifications, mechanical specifications and mounting power requirements, interface description, and typical electrical interface and timing characteristics of Model TM848-1 and TM848-2 eight-inch flexible disk drives. The TM848-1 disk drive is a forty-eight (48) tracks per inch, single-sided recording device. The TM848-2 disk drive has the same number of tracks per inch, and is a double-sided recording.

2. MAJOR FEATURES

2.1 WRITE PROTECT (STANDARD)

When a Write Protected diskette is inserted into the flexible disk drive, the write electronics are disabled.

2.2 DAISY CHAIN CAPABILITY (STANDARD)

The disk drive provides Address Selection and Gating functions necessary to daisy chain a maximum of four (4) disk drives at the user's option. The last disk drive on the daisy chain terminates the interface. The terminations are accomplished by a resistor array plugged into a DIP socket.

2.3 INTERNAL TRIM ERASE (STANDARD)

The flexible disk drive provides the necessary control signals internally for proper trim erasure of data.

2.4 COMPACT SIZE

The reduced size of the disk drive enables it to occupy only one-half the mounting space required for a conventional drive.

2.5 DISKETTE LEVER LOCK (OPTIONAL)

The diskette lever lock is controlled by the host system.

2.6 INDUSTRY STANDARD INTERFACE COMPATIBILITY

The disk drive is compatible with Industry Standard Controllers.

2.7 STRAPPABLE OPTIONS

Industry Standard strappable options are available (see Section 10).

2.8 ACTIVITY INDICATOR (STANDARD)

An activity indicator, located on the front panel, is automatically illuminated when the flexible disk drive is selected.

3. PERFORMANCE SPECIFICATIONS

3.1 HEAD WEAR GUARANTEE

Head Wear Guarantee: 15,000 media contact hours

3.2 MEDIA AND MEDIA WEAR GUARANTEE

Media: 203.20 mm (8.0 inch) Industry Standard Diskette
Wear Guarantee: 3.0×10^6 passes per track, minimum

3.3 TRACKS

Number Of Tracks: 77 for TM848-1
154 for TM848-2, 77 per surface

Spacing: .529 mm (20.8 milinches)

Inside Track Radius: 51.50 mm (2.03 inches), Side Ø, both models
49.42 mm (1.95 inches), Side 1, TM848-2 only

3.4 ACCESS TIMES

Track-To-Track: 3 milliseconds
Head Settling Time: 15 milliseconds
Average Access Time, including head settling time: 91 milliseconds

3.5 DISK ROTATIONAL SPEED

Motor Start Time: 0.7 second, maximum
Average Latency, including seek and disk travel: 83 milliseconds
Disk Rotational Speed: 360 RPM
Instantaneous Speed Variation (ISV): ± 1.25%

3.6 RECORDING CAPACITY AND METHOD

Flux Changes Per Inch, Inside Track:
6536 FCI, Side Ø, both models
6816 FCI, Side 1, TM848-2 only

Transfer Rate:
250K Bits per second, single density
500K Bits per second, double density

Unformatted Recording Capacity:
0.8 MBytes per disk, single density
1.6 MBytes per disk, double density

IBM Format Recording Capacity:
0.6 MBytes, single density
1.2 MBytes, double density

Recording Method:
FM, Single Density
MFM, Double Density

3.7 ELECTROMAGNETIC CHARACTERISTICS

Tandon Corporation's Model TM848-1 and Model TM848-2 eight-inch flexible disk drives are designed to minimize electrical interference generated internally, propagated through space or on associated conductors.

4. RELIABILITY

4.1 ERROR RATES

Soft Read Errors: 1 in 10^9 bits
Hard Read Errors: 1 in 10^{12} bits
Seek Errors: 1 in 10^6

4.2 MEAN TIME BEFORE FAILURE

MTBF:10,000 power-on hours

4.3 MEAN TIME TO REPAIR

MTTR: 30 minutes

4.4 PERIODIC MAINTENANCE

Typical Periodic Maintenance: Every 10,000 power-on hours (see Maintenance Schedule, OEM manual).

4.5 COMPONENT LIFE

Average Component Life: 15,000 power-on hours

5. ENVIRONMENTAL SPECIFICATIONS

The disk drive has been designed to meet its operational specifications under the environmental conditions listed on the next page.

5.1 TEMPERATURE

Operating Temperature: 44°C to 46°C (40°F to 115°F)
Storage Temperature: -40°C to 71°C (-40°F to 160°F)
Wet Bulb Temperature: 26°C (78°F) maximum

5.2 RELATIVE HUMIDITY

Operating (Noncondensing): 20% – 80%

5.3 ALTITUDE

Operating or nonoperating, altitude: From 304.8 meters (1000 feet) below sea level to 15,240 meters (50,000 feet) above sea level.

5.4 SHIPMENT

When prepared for shipment by Tandon Corporation, the eight-inch flexible disk drive will meet the requirements of NSTA Pre-Shipment Test Procedure Project 1A.

6. MECHANICAL SPECIFICATIONS AND MOUNTING

6.1 MECHANICAL SPECIFICATIONS

The physical dimensions of Model TM848-1 and Model TM848-2 eight-inch, flexible disk drives are:

Height: 58 mm (2.30 inches)
Width: 217 mm (8.55 inches)
Length: 337 mm (13.25 inches)
Weight: 15.4 kg (7 pounds)

6.2 MOUNTING

The eight-inch, flexible disk drive may be mounted horizontally or vertically. When mounted horizontally, the circuit board must be on top.
Four 8-32nd tapped mounting holes are provided on the bottom of the disk drive, as are two 8-32nd tapped mounting holes on each side of the disk drive, for attachments to user-supplied mounting brackets (see Figure 1). While four mounting holes are provided for convenience, a three-hole mounting scheme is recommended.

Two drives may be mounted in a single, full-size drive enclosure (4.6" high), using optional mounting brackets.

7. POWER REQUIREMENTS

7.1 DC POWER SEQUENCING

A maximum of 0.7 second is required from the time power is applied to the disk drive until a command can be accepted.

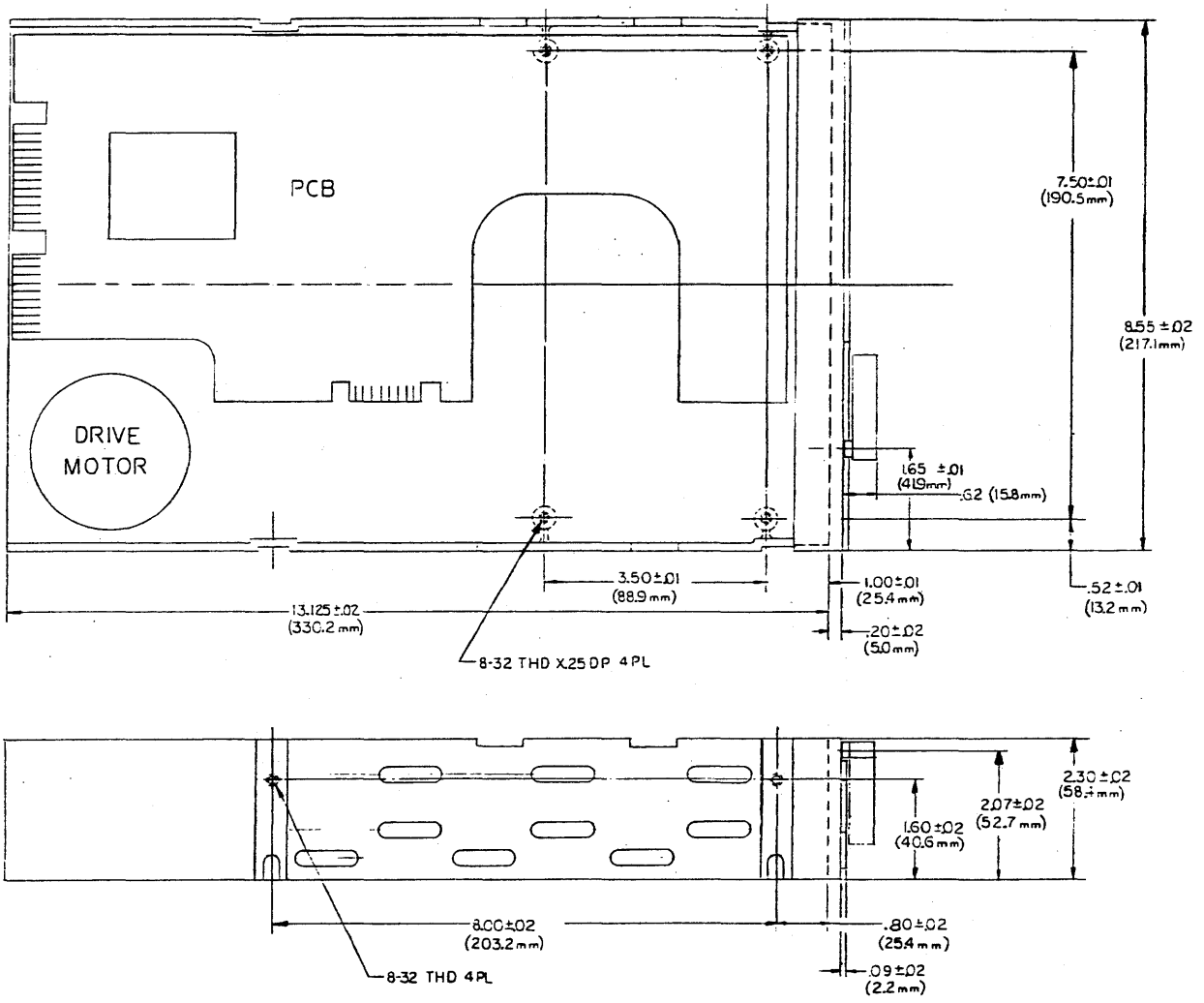

FIGURE 1
DRIVE OUTLINE DRAWING

TABLE 1

DC Power Connector Pin Assignment

PIN NUMBER	DESCRIPTION
1	+24V dc
2	+24V Return
3	+5V Return
4	No connection
5	+5V dc
6	+5V Return

7.2 PRIMARY POWER

Standard Operation:

Voltage: +24V dc ±10%
Selected Motor On: 1.2 amps typical
Deselected: 0.1 amp typical
Spindle Motor: 0.5 amps typical

Voltage: +5V dc ±5%
Selected Motor On: 1.0 amp typical

7.3 DC POWER CONNECTOR

DC power is supplied to the eight-inch, flexible disk drive through a six-pin AMP connector, Part Number 1-480271-0, connected to the circuit board. The mating connector, AMP Part Number 1-480270-0, utilizes AMP contact Part Number 60619-1. Pin assignments are found in Table 1.

The chassis should be connected to earth ground to ensure proper operation.

8. INTERFACE DESCRIPTION

The I/O is an industry-compatible interface. The connector is a 50-pin edge card connector.

All output lines are TTL compatible open collector, which are terminated in the host system. Input lines utilize Schmitt trigger type inverters terminated with 150 ohms to +5V dc

Table 2 shows all drive interface lines and pin connections. Maximum cable length is three meters (ten feet) of ribbon or twisted pair cable.

Figure 3 shows interface timing relationships for the signals discussed below (see Section 9).

8.1 INPUT (CONTROLLER-TO-DISK DRIVE) LINES

There are twelve (12) input lines, eleven (11) of which are standard and one (1) of which is a strappable feature.

There are two kinds of input signals: those multiplexed in a multiple drive system and those which are not.

The input signals not multiplexed include:

1. Motor Off Control
2. Drive Select 1
3. Drive Select 2
4. Drive Select 3
5. Drive Select 4

TABLE 2

DRIVE INTERFACE LINES AND PIN CONNECTIONS

GROUND	PIN NUMBER	SIGNAL
1	2	Write Current Switch
3	4	Alternate Input/Output (I/O)
5	6	Motor Off Control
7	8	Alternate I/O
9	10	Two Sided (Strappable) (Model TM8484-2 only)
11	12	Disk Change (Strappable)
13	14	Side Select (Model TM848-2 only)
15	16	Activity Indicator (Strappable)
17	18	Not used
19	20	Index
21	22	Ready
23	24	Alternate I/O
25	26	Drive Select 1 (Side Select Option, TM848-2 only)
27	28	Drive Select 2 (Side Select Option, TM848-2 only)
29	30	Drive Select 3 (Side Select Option, TM848-2 only)
31	32	Drive Select 4 (Side Select Option, TM848-2 only)
33	34	Direction Select (Side Select Option, TM848-2 only)
35	36	Step
37	38	Write Data
39	40	Write Gate
41	42	Track ØØ
43	44	Write Protect
45	46	Read Data
47	48	Alternate I/O
49	50	Alternate I/O

The input signals to be multiplexed include:

1. Step
2. Direction Select
3. Write Gate
4. Write Data
5. Activity Indicator (Strappable)
6. Write Current Switch
7. Side Select (Model TM848-2 only)

8.1.1 MOTOR OFF CONTROL

The motor control lead is used to turn off the spindle motor. When the signal line logic level goes true (low), the drive's spindle stops. When the Motor Off Control logic level goes false (high), the drive's spindle accelerates to a speed of 360 RPM, and stabilizes at this speed within a maximum of 0.7 of a second.

8.1.2 DRIVE SELECT

When activated to a true (low) level, Drive Select activates the disk drive electronics, loads the Read/Write head, and readies the drive to respond to Step. Read or Write commands. Four separate input lines - - Drive Select 1, Drive Select 2, Drive Select 3, and Drive Select 4 - - are provided so up to four disk drives can be multiplexed in a system. The address of each disk drive is determined by a select shunt on the signal circuit board.

NOTES

The Drive Select line must remain stable at the logical true (low) level until a Step, Read, or Write command is completed.

Only one Drive Select line can be at a logical true (low) level at a time.

8.1.3 STEP

The Step interface signal causes the Read/Write head assembly to move in the direction of motion defined by the Direction Select line. After the disk drive is selected, a true (low) pulse initiates the access motion on the trailing edge of the Step pulse.

NOTE

The time period between consecutive trailing edges of Step pulses should be no less than three (3) milliseconds.

8.1.4 DIRECTION SELECT

The Direction Select interface signal determines the direction of motion of the Read/Write head assembly when the Step line is pulsed. The Read/Write head assembly moves toward the center of the disk when the Direction

Select line is at the logical true (low) level and a Step pulse is issued. Conversely, the Read/Write head assembly moves away from the center of the disk when the Direction Select line is at the logical false (high) level and a Step pulse is issued.

NOTE

To ensure correct positioning, the Direction Select line should be stable one (1) mircosecond prior to the trailing edge of the Step pulse. It should remain stable for one (1) mircosecond after the Step pulse.

The drive electronics ignore Step pulses when one of the conditions listed below exists:

1. The Write Gate signal is true (low).
2. The disk drive is not selected.

8.1.5 WRITE GATE

When this signal is in a true (low) state, the write electronics are enabled for writing data on the diskette. The read electronics are disabled. The Write Gate signal turns on write current in the Read/Write head assembly. Data is written under the control of the Write Data input line and the Side Select input line. When the Write Gate line is logical one, the write electronics are disabled.

NOTES

Changes of state of the Write Gate line should occur before the first Write Data pulse.

When a write-protected diskette is installed, the write electronics are disabled.

8.1.6 WRITE DATA

The Write Data interface line is enabled by Write Gate being active. The Write Data line provides the data to be written on the diskette. Each transition from a logical one to a logical zero level causes the current passing through the Read / Write head assembly to be reversed, resulting in a data bit being written on the diskette.

8.1.7 ACTIVITY INDICATOR

This strappable feature illuminates the Activity Indicator when activated to a logical zero level.

8.1.8 WRITE CURRENT SWITCH

A logical zero (low) signal initiates the lower value of Write Current for writing on Tracks 43 through 76. Conversely, a logical one (high) signal allows use of a higher value of write current for Tracks 0 through 42.

8.1.9 SIDE SELECT

The side Select interface line is available only on Tandon's Model TM848-2. It defines which side of a two-sided diskette is to be used for reading or writing. An open circuit or logical one selects the Read/Write head on the Side Ø surface of the diskette. A true (low) selects the Read/Write head on the Side 1 surface of the diskette. When switching from one head to the other, a 100 microsecond delay is required before any read or write operation can be initiated.

8.2 OUTPUT (DISK DRIVE-TO-CONTROLLER) LINES

There are seven (7) output lines, five (5) of which are standard and two (2) of which are strappable features.

The standard output signals are:

1. Read Data
2. Track ØØ
3. Write Protect
4. Index
5. Ready

The strappable output signals are Disk Change and Two Sided, the latter of which is available only on Model TM848-2.

8.2.1 READ DATA

The Read Data line transmits data to the Controller when the disk drive is selected and not writing. It provides a pulse for each flux transition recorded and detected on the diskette by the drive electronics. Normally, this signal is a logical one level (high); it becomes a logical zero level (low) for the active state. The Read Data output line goes to a logical zero level (low) for a duration of 200 nanoseconds, ±50 nanoseconds, for each flux change recorded on the diskette.

8.2.2 TRACK ØØ

When the disk drive is selected, the Track ØØ interface signal indicates to the Controller that the Read/Write head is positioned at Track ØØ, the outermost track. This signal remains at a logical zero level (low) until the Read/Write head assembly is moved away from Track ØØ. This signal is at a logical one level (high) when the selected disk drive's Read/Write head assembly is not at Track ØØ.

8.2.3 WRITE PROTECT

The Write Protect signal is provided to indicate to the user a Write Protected diskette is installed. This signal is a logical zero level when the diskette's write protect notch is not covered.

When the Write Protect signal is a logical one level, the write electronics are enabled and write operations can be performed.

NOTE

Removing the WP strap and installing the NP strap allows the disk drive to write on the disk when the disk is write protected. Write Protect status only indicates the write protect status of the diskette, not the configuration of the WP – NP straps.

8.2.4 INDEX

The Index signal pulse is provided once each revolution of the diskette to indicate the logical beginning of a track to the Controller.

8.2.5 READY

The Ready interface signal indicates that the diskette is rotating at 360 RPM and two (2) index holes have been sensed after a diskette was inserted into the disk drive.

When a single-sided diskette is installed, Ready is active (low) if Side Ø is selected. Ready is false (high) if Side 1 is selected on TM848-2. When a two-sided diskette is installed, Ready is active when either side of the diskette is selected on the TM848-2.

8.2.6 DISK CHANGE

This strappable feature provides a true (low) signal to the interface when Drive Select is activated if the disk drive has gone from a Ready to a Not Ready condition while deselected. This line is reset on the true-to-false transition of Drive Select if this disk drive has gone to a Ready condition.

8.2.7 TWO SIDED

This option is available only on Tandon's Model TM848-2. This strappable feature indicates that a two-sided diskette is installed.

9. TYPICAL ELECTRICAL INTERFACE AND TIMING CHARACTERISTICS

Lines between the Controller and the disk drive have the following characteristics:

True = Vout +Ø.4V (MAX) @ Iout = 48 mA (maximum)

False = Vout +2.4V (MIN) (Open collector @ Iout = 250 uA) (maximum)

Figure 2 contains the electrical interface characteristics. Figure 3 contains the general control and data timing requirements for Model TM848-1 and TM848-2.

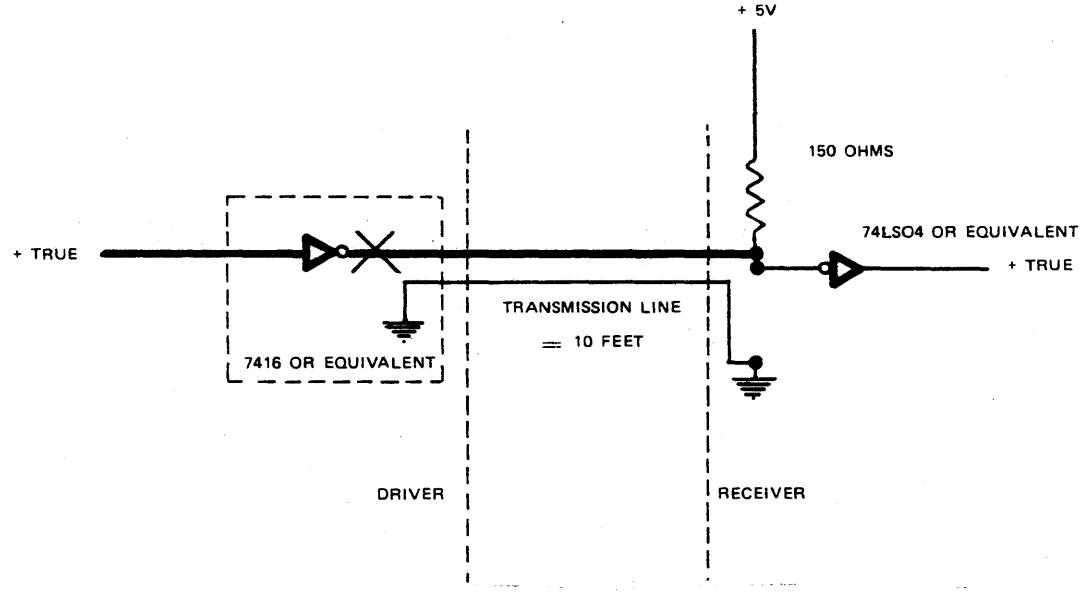

FIGURE 2
ELECTRICAL INTERFACE CHARACTERISTICS

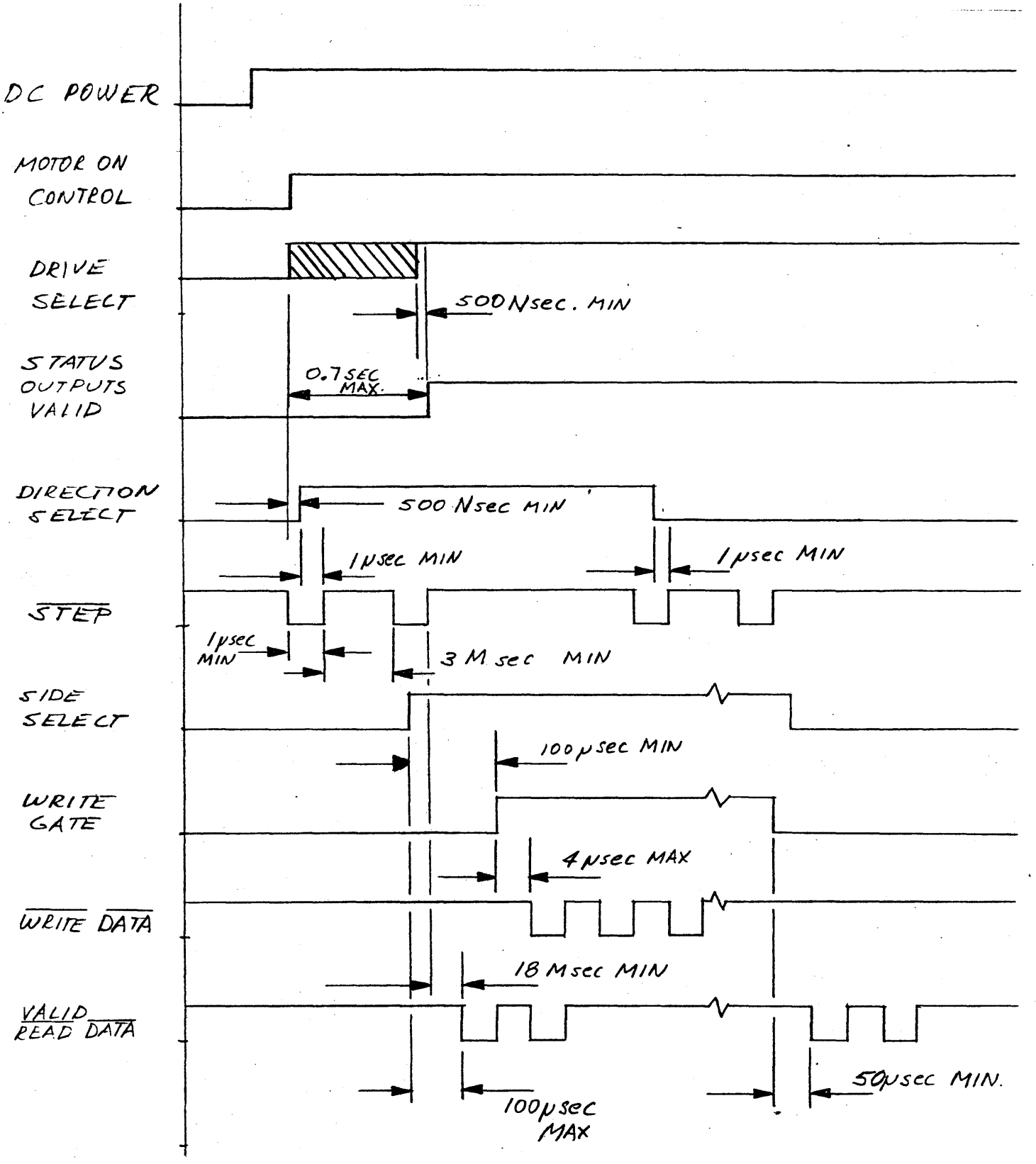

FIGURE 3

GENERAL CONTROL AND DATA TIMING REQUIREMENTS

10. STRAPPABLE OPTIONS

Table 3 contains a list of user-selectable strappable options for Model TM848-1 and TM848-2.

TABLE 3

USER-SELECTABLE STRAPPABLE OPTIONS

TRACE DESIGNATOR	DESCRIPTION	FROM FACTORY OPEN	SHORT
DS1 - DS4	Drive address select pins		DS1
Z	In use from Drive Select		X
R	Ready alternate output pad		X
I	Index alternate output pad		X
D	Alternate input in use	X	
DC	Alternate output disk change	X	
2S	Alternate output disk two-sided*	X	
DS	Stepper power from Drive Select	X	
DL	Diskette Lever (Optional)	X	
RR	Radial Ready		X
RI	Radial Index		X
WP	Inhibit write when Write Protected		X
1B - 4B	Side Select option using Drive Select *	X	
S1 - S3	Head Select option	S1, S3	S2

*For Model TM 848-2 only

REVISIONS					
REV	DESCRIPTION	DATE	DR	CHK	APPR
B	PROD. RELEASE E.O. 40002	7/23/81	D.W.	RVM	RVM

SELECTION LOGIC

HEAD LOAD OPTION

HEAD LOAD SOLENOID DRIVER

REFERENCE DESIGNATIONS LAST USED			
U41	L5	C110	
Q21	CR31		

8. ALL CAPACITORS ARE IN MICROFARADS 50V.
7. ALL INDUCTORS ARE MICROHENRY'S ± 10%.
6. ALL RESISTORS ARE IN OHMS ¼ W, ± 5%.
5. -o o- STRAP OPTION.
4. □n - STRAP OPTION LOCATED IN SHUNT U3.
3. * - RESISTOR LOCATED IN RESISTOR PACK RP1.
2. ▷ - ON P13 UNLESS OTHERWISE SPECIFIED.
1. ~ - STRAP PER ETCH ON CIRCUIT BOARD.

NOTES: UNLESS OTHERWISE SPECIFIED

THE INFORMATION CONTAINED HEREON IS THE PROPERTY OF TANDON MAGNETICS AND PORTION OF THIS DATA SHALL BE RELEASED DISCLOSED USED, OR DUPLICATED FOR USE IN PROCUREMENT OR MANUFACTURING WITHOUT SPECIFIC WRITTEN PERMISSION FROM TANDON MAGNETICS

UNLESS OTHERWISE SPECIFIED
DIMENSIONS ARE IN INCHES
TOLERANCES: .XX ± .01, .XXX ± .005, X ±, X ±, ANGULAR ± 1/2°
BREAK ALL SHARP CORNERS APPROX. .010
FINISH:

SIGNATURES	DATE
DR. DANIEL WILTSHIRE	7/23/81
CHK RVM	
DES RVM	
ENGR RVM	
PROJ. ENGR Bill Munro	7/23/81

MATL:

NEXT ASSY	FIRST USE
APPLICATION	

Tandon MAGNETICS CORPORATION

TITLE: MODEL 848 DISKETTE DRIVE ELECTRONICS.

SIZE	CODE IDENT NO.	DWG NO.	REV
		210092-000	B
SCALE	DO NOT SCALE DWG	SHEET 1 OF 5	

Schem. 210092 SH 1

EAM FILE COPY, IRVINE, CA

KLINGLER K-VEL-H 9/79

REVISIONS					
REV	DESCRIPTION	DATE	DR	CHK	APPR
B	PROD. RELEASE E.O. # 40002	7/23/81	DW		

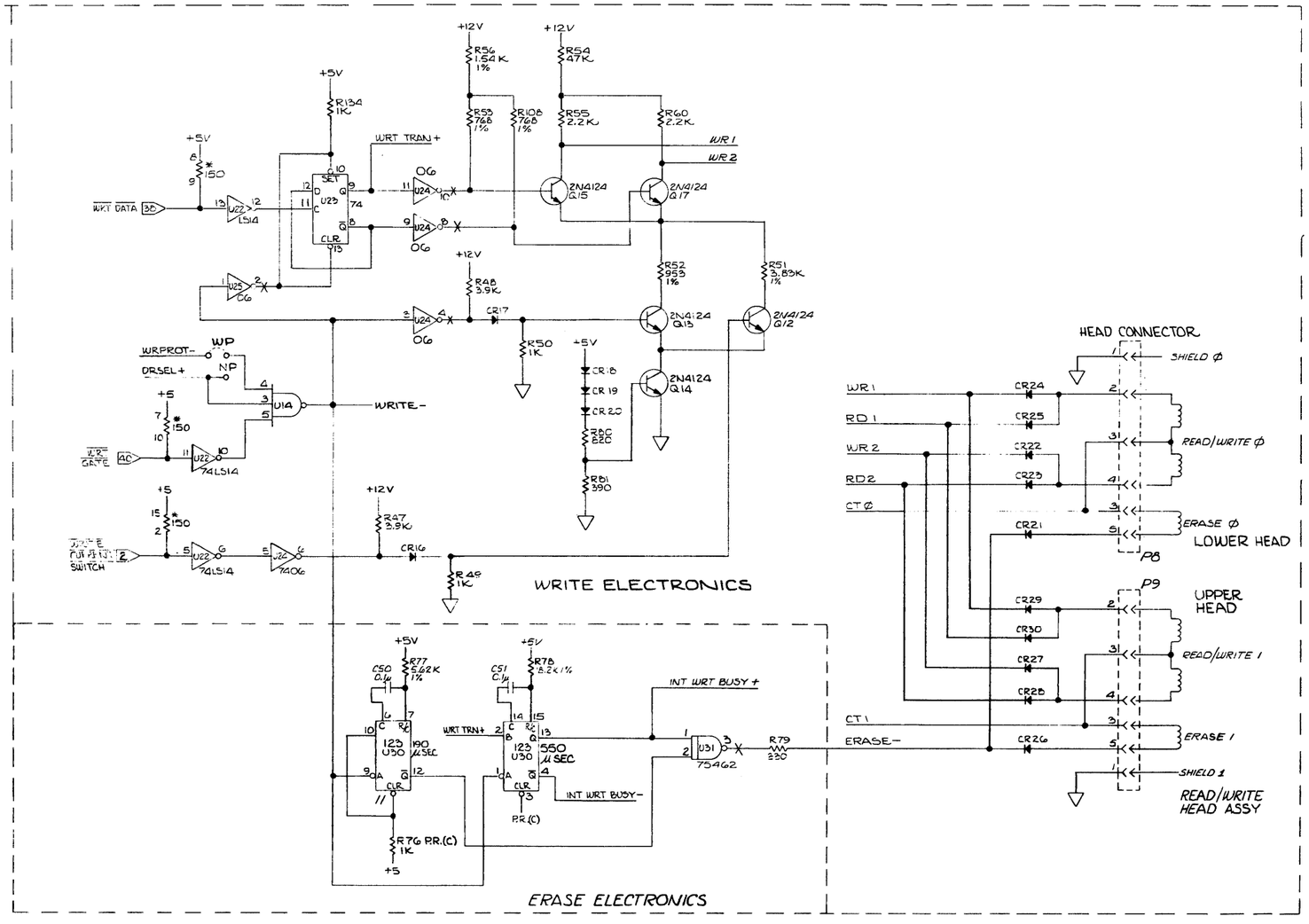

1. *-RESISTOR LOCATED IN RESISTOR PACK RP1

NOTES: UNLESS OTHERWISE SPECIFIED

NEXT ASSY	FIRST USE
APPLICATION	

THE INFORMATION CONTAINED HEREON IS THE PROPERTY OF TANDON MAGNETICS NO PORTION OF THIS DATA SHALL BE RELEASED DISCLOSED USED OR DUPLICATED FOR USE IN PROCUREMENT OR MANUFACTURING WITHOUT SPECIFIC WRITTEN PERMISSION FROM TANDON MAGNETICS

UNLESS OTHERWISE SPECIFIED
DIMENSIONS ARE IN INCHES
TOLERANCES:
.XX ±
.XXX ±
X/X ±
ANGULAR ± 1/2°
BREAK ALL SHARP CORNERS APPROX. .010

FINISH:

SIGNATURES		DATE
DR.	WILTSHIRE	7/27/81
CHK	RUM	
DES	RUM	
ENGR	RUM	
PROJ. ENGR	RU Munro	7-23-81

MATL:

Tandon
MAGNETICS CORPORATION

TITLE
MODEL 348 DISKETTE DRIVE ELECTRONICS

SIZE	CODE IDENT NO.	DWG NO.	REV
		210092-000	B
SCALE NONE		DO NOT SCALE DWG	SHEET 2 OF 5

Schem. 210092 SH 2

EAST FILE CORP. IRVINE, CA HANGER EF422

KLINGLER K VEL-H 9/79

REVISIONS					
REV	DESCRIPTION	DATE	DR	CHK	APPR
B	PROD. RELEASE E.O. #40002	7/31/81	DW		

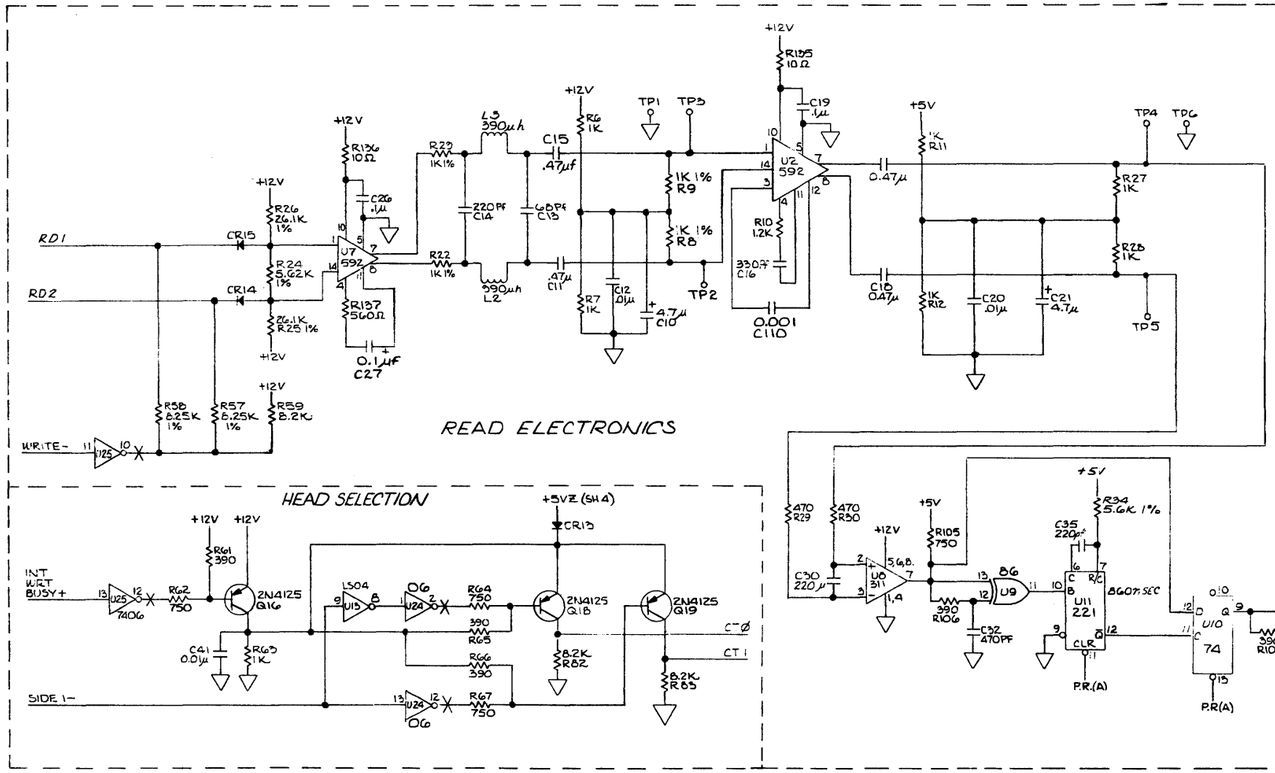

NOTES: UNLESS OTHERWISE SPECIFIED

KLINGLER K-VEL-H 9/79

THE INFORMATION CONTAINED HEREON IS THE PROPERTY OF TANDON MAGNETICS. NO PORTION OF THIS DATA SHALL BE RELEASED OR DISCLOSED UNLESS AUTHORIZED FOR USE IN PROCUREMENT OR MANUFACTURING WITHOUT SPECIFIC WRITTEN PERMISSION FROM TANDON MAGNETICS.

UNLESS OTHERWISE SPECIFIED
DIMENSIONS ARE IN INCHES
TOLERANCES:
.XX ± ANGULAR
.XXX ± ± 1/2°
X ±
X ±
BREAK ALL SHARP CORNERS
APPROX. .010

SIGNATURES	DATE
DR WILTSHIRE, D.	
CHK RVM	
DES RVM	
ENGR RVM	
PROJ. ENGR RV Mumm	7/31/81

NEXT ASSY | FIRST USE
APPLICATION

FINISH:

MATL:

Tandon MAGNETICS CORPORATION

TITLE: MODEL 848 DISKETTE DRIVE ELECTRONICS

SIZE	CODE IDENT NO.	DWG NO.	REV
D		210092-000	B
SCALE ~		DO NOT SCALE DWG	SHEET 3 OF 5

Schem 210092

SH 3

EASI FILE CORP. IRVINE, CA HANGER EF1422

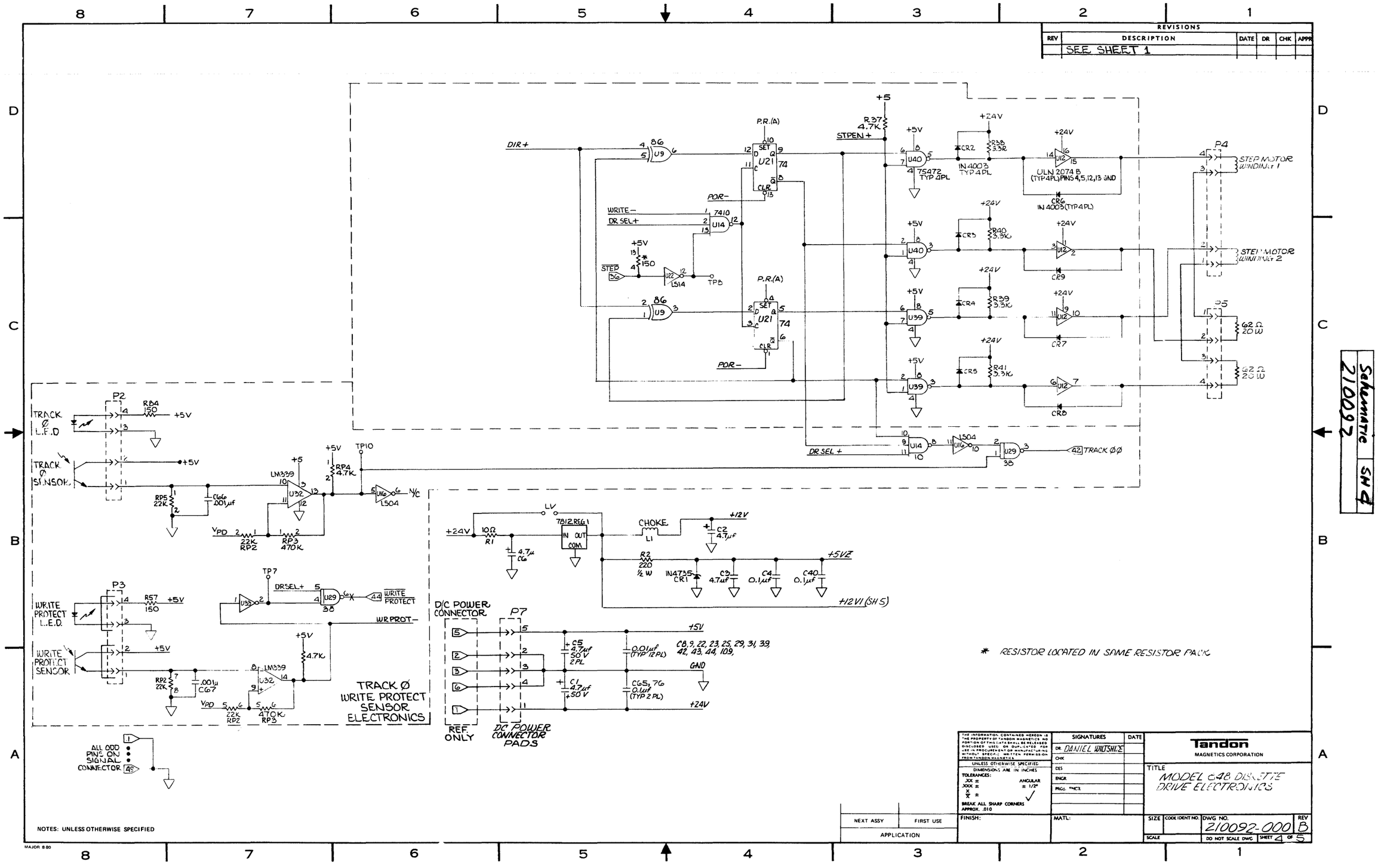

REVISIONS
REV
DESCRIPTION
DATE
DR
CHK
APPR
SEE SHEET 1
DIR +
STPEN +
P.R.(A)
POR-
WRITE-
DR SEL+
STEP
TP8
TP10
TP7
DR SEL +
TRACK Ø L.E.D
TRACK Ø SENSOR
WRITE PROTECT L.E.D.
WRITE PROTECT SENSOR
WRITE PROTECT
WR PROT-
TRACK Ø WRITE PROTECT SENSOR ELECTRONICS
ALL ODD PINS ON SIGNAL CONNECTOR
D/C POWER CONNECTOR
REF. ONLY
DC POWER CONNECTOR PADS
CHOKE
+12V
+5VZ
+12V1 (SH 5)
GND
+24V
+5V
* RESISTOR LOCATED IN SAME RESISTOR PACK
NOTES: UNLESS OTHERWISE SPECIFIED
Tandon
MAGNETICS CORPORATION
TITLE
MODEL 648 DISKETTE DRIVE ELECTRONICS
DR. DANIEL WILTSHIRE
DWG NO. 210092-000
REV B
SHEET 4 OF 5
DO NOT SCALE DWG
Schematic
210092
SH 4

REVISIONS					
REV	DESCRIPTION	DATE	DR	CHK	APPR
	SEE SHEET 1				

+12 V1 (SH 4) — L5 CHOKE — +12V2; 2.2µf C62; 0.1 C61

SPINDLE SPEED ADJUSTMENT — R133 5K; R128 10K; C59 2.2µf; 100µf C60; R125 47K; 100K R127; C54 0.022µf; C55 10µf; C53 0.022µf; C64 0.1µf; U41 MS1970L SPEED CONTROL (SIP PACK); 47 R126

+5V — R68 560K; C45 33µf; U28; POR−

+5V — R101 1K; C77 0.047µf; 10K R109; 12V; U36 14077; R116 1K; C52 0.022

R138 270Ω

U35 OG; U35 OG; U04 U16 — MTRON +(SH 1)

P14 — (SWITCH OPEN = DISKETTE LOADED)

+5V — R100 1K; U35 OG; +5V R73 1K; +5V R72 10K; 0.1 C56; R92 15K

DR SEL− — 7406 U35; M1 ETCH; 0.1 C57; +5V R130 1K; OG U35

+5V — R99 150 — MC1; MC2; MC3; MC4; U35 OG; M2

MOTOR OFF (− = OFF)

+24V — BLK 3

+12V2 — R132 220 — PINK 14; R131 220 — BLU 13

+12V2 — 4.7K R121 — LM2901 U38 — PUR 5; R120 220 — GRY 4; R119 100K

+12V2 — R122 4.7K — U38 — WHI 7; R124 220 — GRN 6; R123 100K

+12V2 — R118 4.7K; R117 4.7K; +12 LM2901 U38; R114 4.7K; R115 4.7K; U37 14001 (TYP); C46 0.001; 2SD633 (4 PL) Q1; R110 4.7K — YEL 11

+12 — U37; C47 0.001; Q2; R111 4.7K — ORG 10

U37; C48 0.001; Q3; R112 4.7K — RED 9

U37; C49 0.001; Q4; R113 4.7K — BRN 8 — PG

+12V2 — LM2901 U38; 2A684 Q21; R129 330; C58 10µf; Q20 2SD843 (ON HEAT SINK)

NOTE: COLORS REFER TO MOTOR WIRING

BRUSHLESS DC SPINDLE MOTOR CONTROL

NOTES: UNLESS OTHERWISE SPECIFIED

THE INFORMATION CONTAINED HEREON IS THE PROPERTY OF TANDON MAGNETICS. NO PORTION OF THIS DATA SHALL BE RELEASED, DISCLOSED, USED OR DUPLICATED FOR USE IN PROCUREMENT OR MANUFACTURING WITHOUT SPECIFIC WRITTEN PERMISSION FROM TANDON MAGNETICS.

UNLESS OTHERWISE SPECIFIED
DIMENSIONS ARE IN INCHES
TOLERANCES: .XX ±; .XXX ±; ANGULAR ± 1/2°; BREAK ALL SHARP CORNERS APPROX. .010

SIGNATURES	DATE
DR	
CHK	
DES	KUM
ENGR	KUM
PROJ. ENGR	RV Munro 7-23-81

NEXT ASSY | FIRST USE
APPLICATION

FINISH: MATL:

Tandon MAGNETICS CORPORATION

TITLE: MODEL 848 DISKETTE DRIVE ELECTRONICS

SIZE D | CODE IDENT NO. | DWG NO. 210092-000 | REV B
SCALE — | DO NOT SCALE DWG | SHEET 5 OF 5

Schem. 210092

EAST FILE CORP. IRVINE, CA. HANGER EF322

KLINGLER K-VEL-IN 9/75